TS-R1051S/XIEL5 THF5825-A/VI

TS-R1051S

210W MAX.

Flush-Mount Car Speaker 10 cm COAXIAL 3-WAY

Haut-Parleurs À Montage Encastré Pour Automobile 3 VOIES COAXIAL 10 cm

Be sure to read this instruction manual before installing this speaker.
Vor dem Einbau des Lautsprecher, verfehlen Sie nicht diese Vorschrift zu lesen.
Prière de lire obligatoirement ce manuel d'installation avant de monter les haut-parleurs.
Prima di installare l'altoparlante leggete tassativamente le istruzioni.
Antes de instalar el altavoz es importante que lea estas instrucciones.
Leia este manual de instruções antes de instalar o alto-falante.
Обязательно прочитайте это руководство перед подключением динамика.

●FEATURES
1. HIGH SENSITIVITY & HIGH POWER HANDLING DESIGN
2. MICA REINFORCED PULP CONE
3. LIGHT WEIGHT RUBBER COATED CLOTH SURROUND
4. ϕ30 mm CONE MIDRANGE
5. FULL COVERED MESH DESIGN
6. SHALLOW BASKET DESIGN

●MERKMALE
1. HOHER WIRKUNGSGRAD & HOHE BELASTBARKEIT
2. MIT MICA VERSTÄRKTER ZELLSTOFFKONUS
3. EXTRA LEICHTE, GUMMIBESCHICHTETE STOFFSICKE
4. ϕ30 mm KONUSMITTELTÖNER
5. KOMPLETT SCHÜTZENDE ABDECKUNG
6. FLACHER KORB

●CARACTÉRISTIQUES
1. CONCEPTION HAUTE SENSIBILITÉ ET HAUTE PUISSANCE
2. MEMBRANE LÉGÈRE RENFORCÉE MICA
3. SUSPENSION ULTRA LÉGÈRE
4. MEMBRANE MEDIUM ϕ30 mm
5. GRILLE DE PROTECTION PLEINE
6. CHASSIS FAIBLE ENCOMBREMENT

●CARATTERISTICHE
1. PROGETTATO PER ALTA SENSIBILITÀ ED ALTA POTENZA
2. CONO IN CELLULOSA RINFORZATO CON MICA
3. RIVESTIMENTO IN GOMMA LEGGERA
4. ALTOPARLANTE DEI MEDI DA ϕ30 mm
5. GRIGLIA A COPERTURA TOTALE
6. DESIGN DEL CESTELLO POCO PROFONDO

●SPECIFICATIONS
- Reproduction system .... Coaxial three way
- Speaker specifications
  - Woofer .... ϕ102 mm
  - Light weight rubber coated cloth surround
  - Heat-resistant voice coil
  - Midrange .... ϕ30 mm Balanced Dome
  - Magnet : 110 g
  - Tweeter .... ϕ10 mm
- Nominal impedance .... 4 Ω
- Sensitivity .... 88 dB (±1.5 dB)
- Frequency response .... 34 Hz to 27 kHz (–20 dB)
- Maximum music power .... 210 W
- Nominal power .... 30 W
- Grille material .... Steel net, heat-proof resin
- Weight (per speaker including accessory parts) .... 0.35 kg
- Gross weight (2 speakers including packaging) .... 0.83 kg

●HOW TO INSTALL
●EINBAU
●MODE D'INSTALLATION
●MODO DI INSTALLAZIONE
●INSTALACION
●COMO INSTALAR
●КАК ПОДКЛЮЧИТЬ

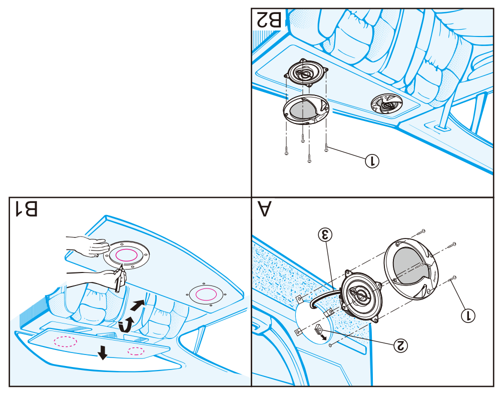

© PIONEER CORPORATION 2017 28-8, Honkomagome 2-chome, Bunkyo-ku, Tokyo 113-0021, JAPAN / JAPON MADE IN VIETNAM FABRIQUÉ AU VIÊT-NAM FABBRICATO IN VIETNAM FEITO NO VIETNÃ СДЕЛАНО В ВЬЕТНАМЕ
PIONEER EUROPE NV Haven 1087, Keetberglaan 1, B-9120 Melsele, Belgium / Belgio / Belgique

TS-R1051S

3-WAY SPEAKER
- MAX. MUSIC POWER 210 W
- NOMINAL POWER 30 W
- WOOFER Ø100 mm
- MIDRANGE Ø30 mm BALANCED DOME
- TWEETER Ø10 mm PIEZOELECTRIC
- IMPEDANCE 4 OHMS
- SENSITIVITY 88 dB (±1.5 dB)
- FREQUENCY RESPONSE 34 Hz TO 27 kHz (–20 dB)
- GROSS WEIGHT 0.83 kg

Pioneer

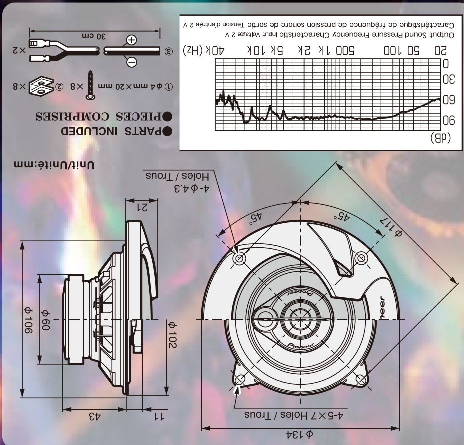

●PARTS INCLUDED
●PIÈCES COMPRISES

1 PAIR / PAIRE
XIEL5

PIONEER CORPORATION

210W MAX · 3WAY VOIES · 10cm

Pioneer

210W MAX
3WAY VOIES
10cm

High Sensitivity

TS-R1051S

3-WAY SPEAKER / HP 3 VOIES
DIFFUSORE 3 VIE / ALTO-FALANTE 3 VIAS
3-ПОЛОСНЫЙ ДИНАМИК

TS-R1051S
HP 3 VOIES
Pioneer

8 84938 37358 6

TS-R1051S
3-WAY SPEAKER
3-ПОЛОСНЫЙ ДИНАМИК
Pioneer

THF5825-A/VI

TS-R1051S

HP 3 VOIES

- PUISSANCE MUSICALE MAXIMUM 210 W
- PUISSANCE NOMINALE 30 W
- HP GRAVE Ø100 mm
- HP MÉDIUM Ø30 mm DÔME ÉQUILIBRÉ
- HP AIGU Ø10 mm PIEZOELECTRIC
- IMPEDANCE 4 OHMS
- SENSIBILITE 88 dB (±1,5 dB)
- BANDE PASSANTE 34 Hz À 27 kHz (–20 dB)
- POIDS BRUT 0,83 kg

210W MAX
3WAY VOIES
10cm

Pioneer

PIONEER CORPORATION
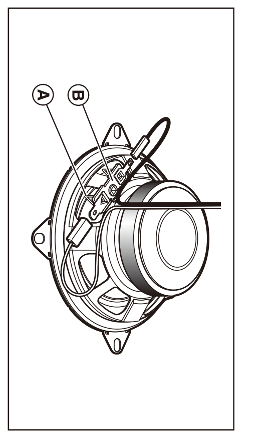
- Do not fail to read the instructions on the flap to the opposite side.
- Lesen Sie unbedingt die Anweisungen auf Klappe zur gegenüberliegenden Seite.
- Ne manquez pas de lire les instructions sur le volet sur le côté opposé.
- Non mancare di leggere le istruzioni sul lembo sul lato opposto.
- Asegúrese de leer las instrucciones sobre la solapa al lado opuesto.
- Não deixe de ler as instruções mencionadas na aba do lado oposto.
- Обязательно прочитайте инструкции на обратной стороне откидной створки.